domix M1

PINOUT

Domotic Module for smart home & co

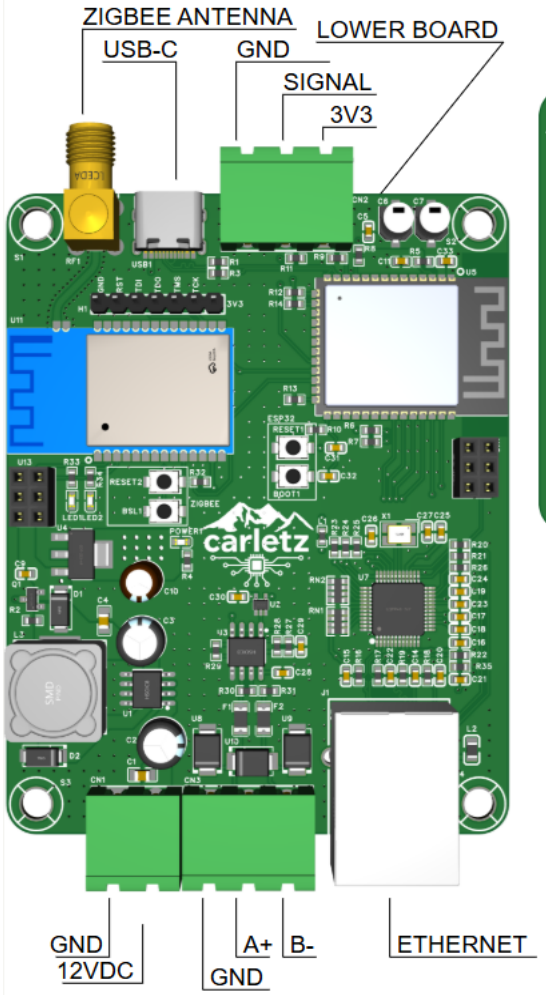

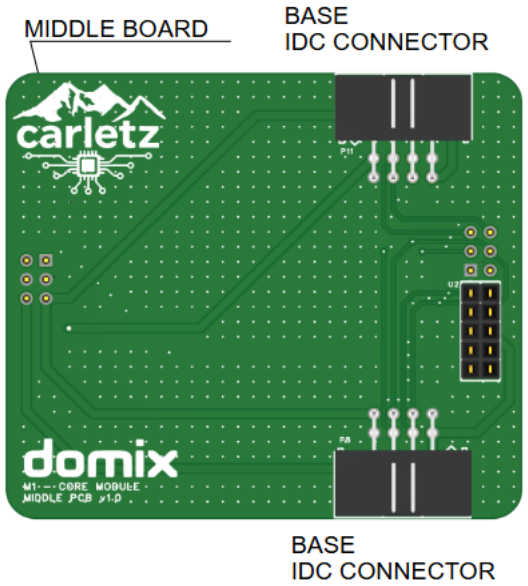

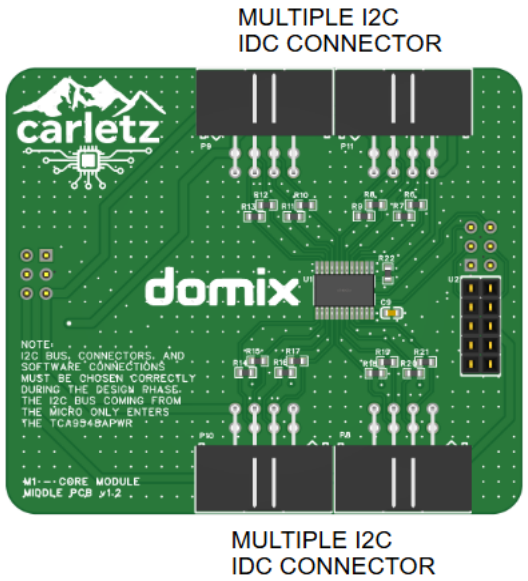

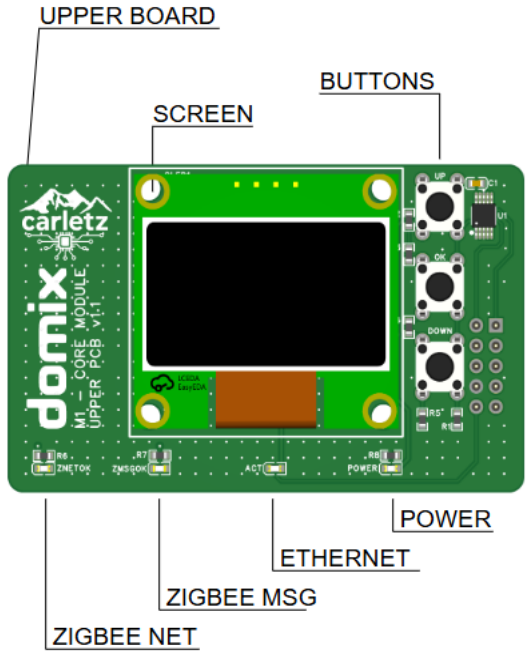

carletz	DOMIX - Domotic module for smart home & co		Create at	2026-02-06	Drawn	carletz
			Update at	2026-02-08	Reviewed	carletz
	Version	Size	Page 1 Total 6	Schematic	M1 - Core Module V1.1		
	1	A4	EasyEDA	Board	M1 - CORE V1.1	Page	Description

domix M1

VERSION

Domotic Module for smart home & co

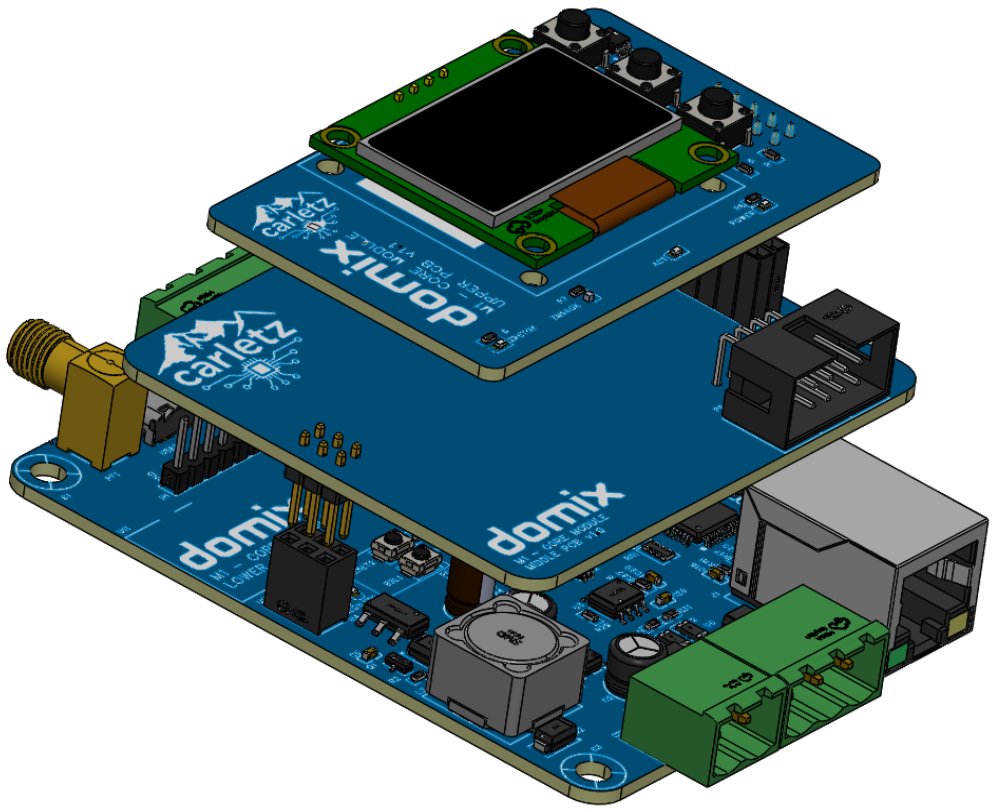

VERSION WITH ONE BUS

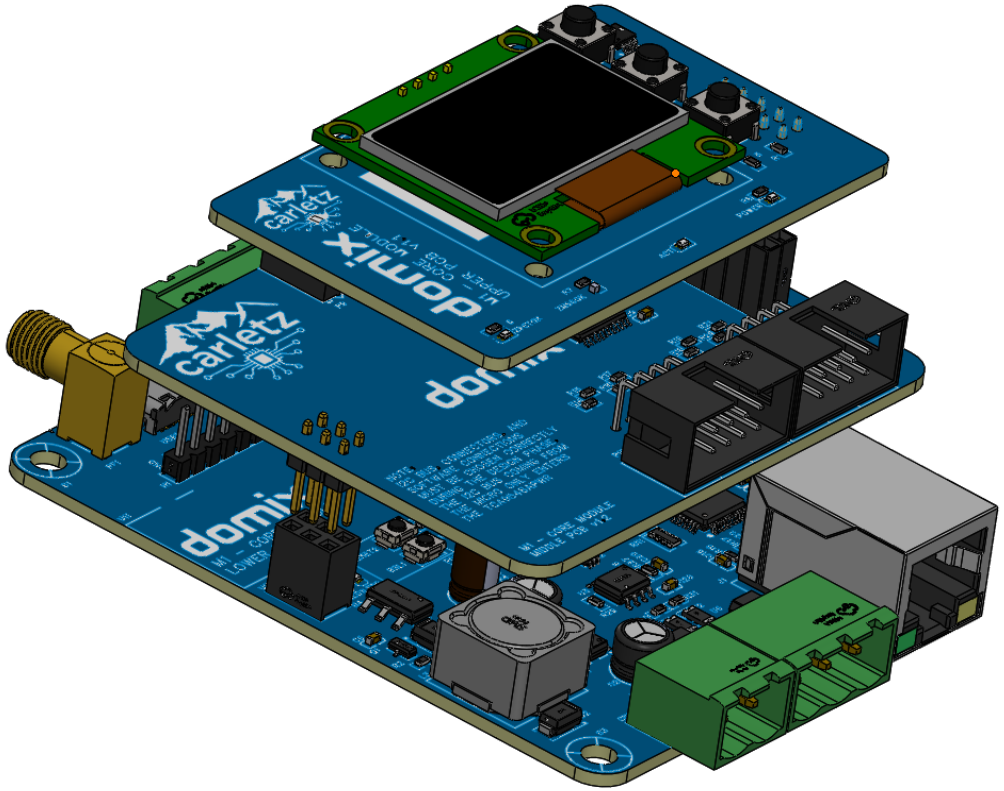

VERSION WITH MULTIPLE BUS

carletz	DOMIX - Domotic module for smart home & co		Create at	2026-02-09	Drawn	carletz
			Update at	2026-02-14	Reviewed	carletz
	Version	Size	Page 2 Total 6	Schematic	M1 - Core Module V1.1		
	1	A4	EasyEDA	Board	M1 - CORE V1.1	Page	Version

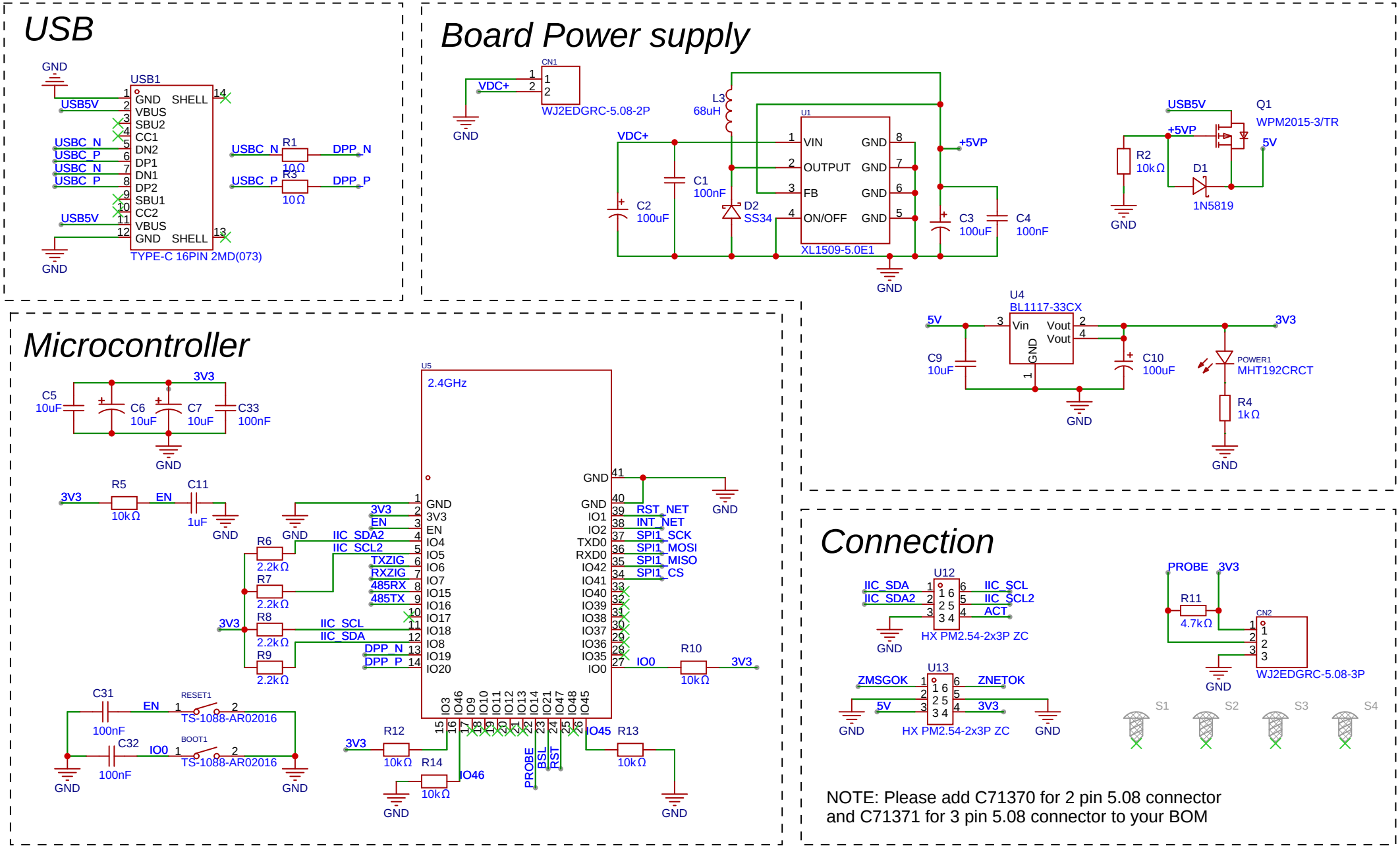

carletz	DOMIX - Domotic module for smart home & co		Create at	2026-02-06	Drawn	carletz
			Update at	2026-02-09	Reviewed	carletz
			Schematic	M1 - Core Module V1.1		
	Version	Size	Page 3 Total 6			
	1	A4	EasyEDA	Board	M1 - CORE V1.1	Page	Microcontroller

Ethernet

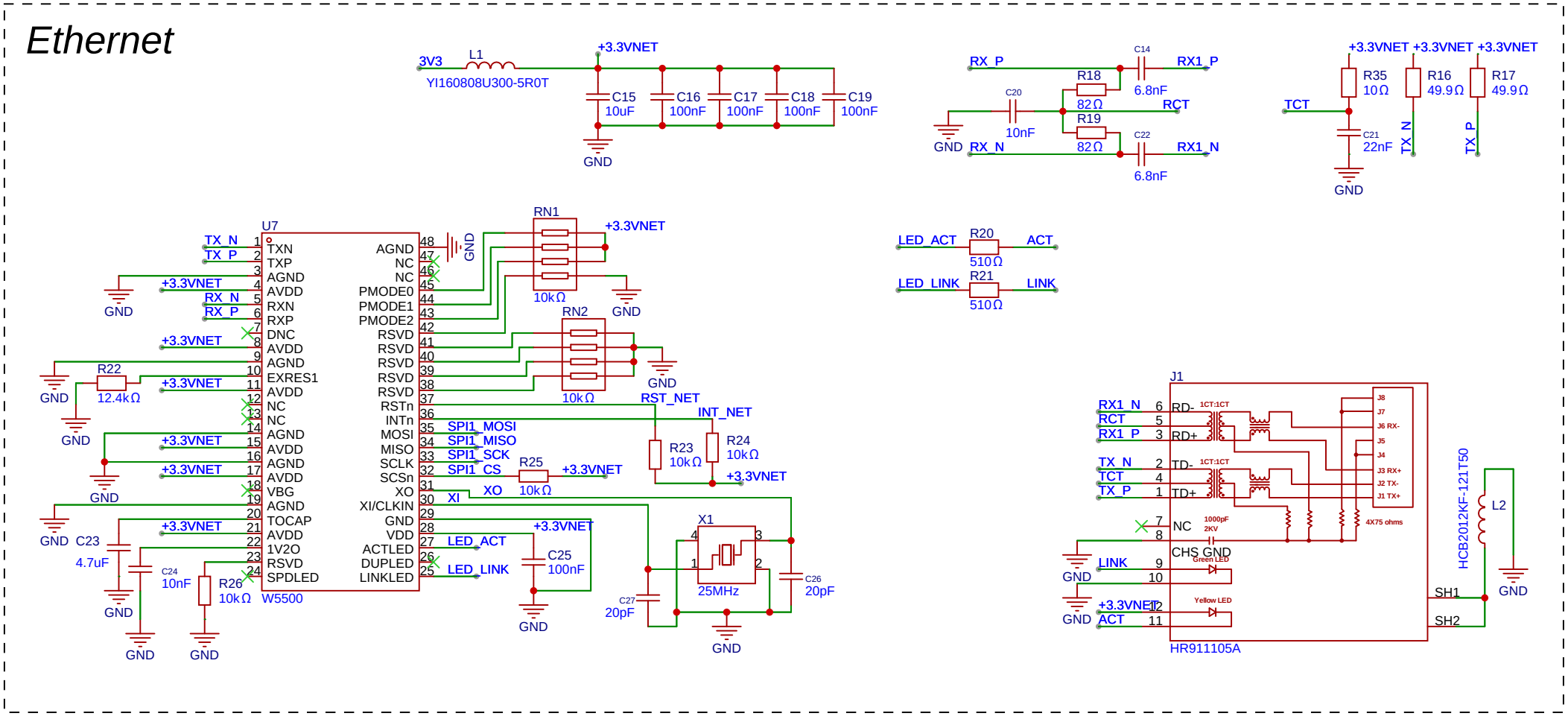

DOMIX - Domotic module for smart home & co			Create at	2026-02-06	Drawn	carletz
			Update at	2026-02-07	Reviewed	carletz
Version	Size	Page 4 Total 6	Schematic	M1 - Core Module V1.1		
1	A4	EasyEDA	Board	M1 - CORE V1.1	Page	Ethernet

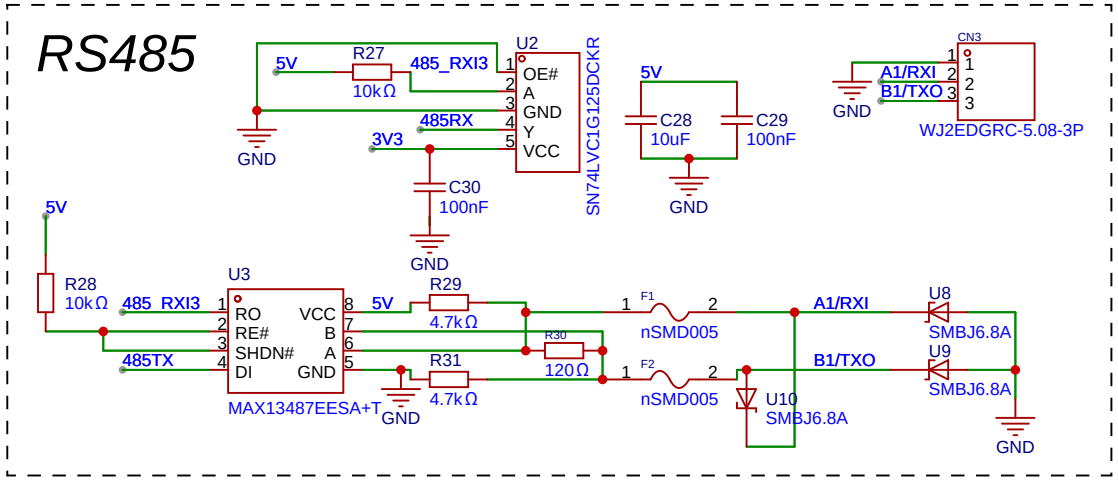

carletz	DOMIX - Domotic module for smart home & co		Create at	2026-02-06	Drawn	carletz
			Update at	2026-02-09	Reviewed	carletz
	Version	Size	Page 5 Total 6	Schematic	M1 - Core Module V1.1		
	1	A4	EasyEDA	Board	M1 - CORE V1.1	Page	RS485

Zigbee

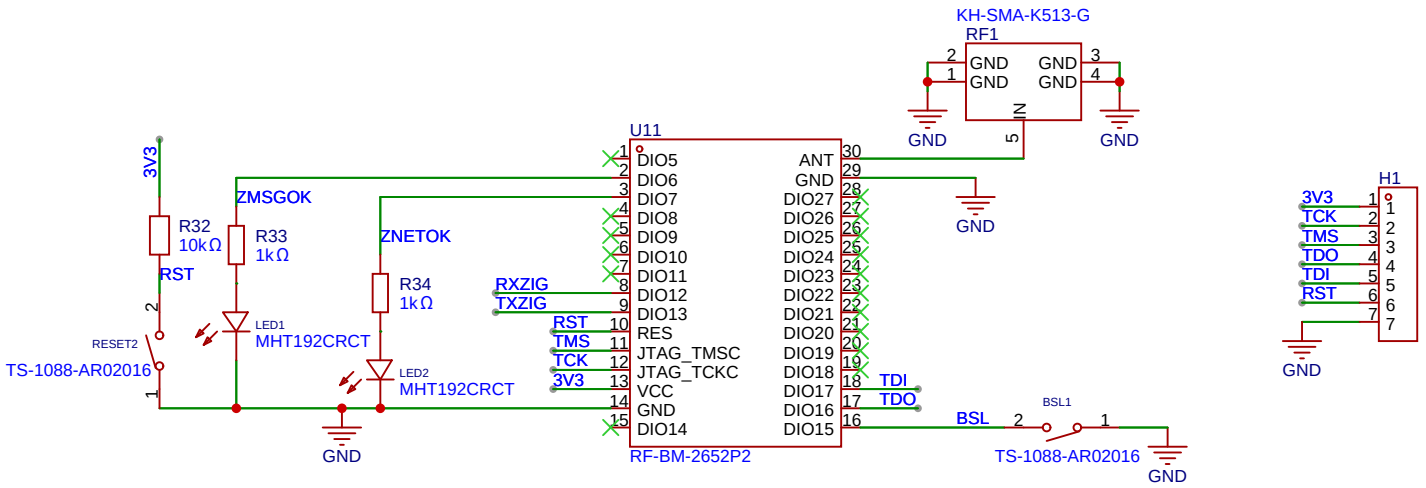

DOMIX - Domotic module for smart home & co			Create at	2026-02-06	Drawn carletz
			Update at	2026-02-09	Reviewed carletz
Version	Size	Page 6 Total 6	Schematic	M1 - Core Module V1.1	
1	A4	EasyEDA	Board	M1 - CORE V1.1	Page Zigbee